

Use Manual

The Guide Book of Electric Actuator for valves

CONTENTS

Product introduction ····· 1

05 series appearance drawing and performance data ····· 2

10 series appearance drawing and performance data ····· 3

20/50 series appearance drawing and performance data ····· 4

100/200 series appearance drawing and performance data ····· 5

400/600 series appearance drawing and performance data ····· 6

Modulating type series appearance drawing and performance data ····· 7

Power and product wiring drawing ····· 8

Installation ····· 10

Connection with valve and drawing of electric butlerfly-valve apperance dimension ·· 11

Regulation of switch type product ····· 12

Regulation of adjusting type product ····· 13

Use and maintenance ····· 16

Product Introduction

Valve electric appliance owns characteristics of special design, beautiful appearance, strong function, operation endurance exceeding ten times of standard of same kind of product, it may be called to be endurable as diamond. The rotation valve electric appliance series product has a completely new appraisal from customers with its super performance and peerless advantage.

1、Powerful function: intelligently, proportionally type, switch type, it has all kinds of signal output type you wish for;

2、Small volume: the volume is just about thirty five percent of product'of same kind;

3、Be portable: its weight is just about thirty percent of product'of same kind;

4、Beautiful appearance: aluminum alloy die-casting housing, fine and evenly, reducing electromagnetic disturance;

5、Wear-resistance: the wormwheel output axle' integration design avoids the stitch closure in connection place of key, the transmission precision high, forged with special copper alloy, with features of high strength and super wear-resistance;

6、Safety guarantee: has passed AC 1500V pressure-withstand test, F grade of insulated electric machine, which guarantees the operation safety;

7、Easily forming complete set: adopting single-phase power, simplifying wire connection from outside; it also can be 380V DC power;

8、Using simply: don't need add-oil, point-check, and owns performance of waterproof and antirust, could be installed at any angle;

9、Protection appliance: double position-limiting,overhot protection, overload protection(optionally);

10、Many kinds of speed: whole stroke time has many kinds as 9s, 13s, 15s, 30s, 50s, 100s,150s(before dispatching from the factory in order to establish);

11、Antirust and anticorrosion: completemachine support, both coupling and screw are made of stainless steel;

12、Intelligently numericallycontrol: the function of intelligently controlling module'height is integrated into electric appliance' body, the externallyconnected localizer is not required. Numerically setting, numerically regulating, highly accurate, selfdiagnosis, many functions on one machine.

Appearance and name of every part

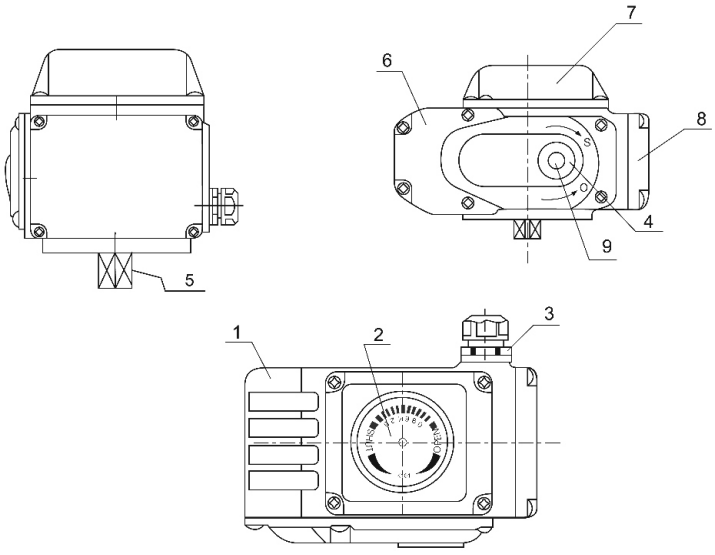

1	case body
2	opening gauge
3	wire-in wire lock
4	handle axle' rubber stopper
5	output axle
6	deceleration cover
7	electric cover
8	wiring cover
9	handle-axle hole

05 series appearance drawing and performance data

Performance \ Model / Power	05				
	DC24V	AC24V	AC110V	AC220V	AC380V
Motor power	10W				
Rated current	2A	2.2A	0.48A	0.24A	0.15A
Output torque	30Nm / 50Nm	15Nm/30Nm/50Nm			
Action time	6S / 10S	10S/20S/30S			
Circuit control	B type、S type、R type、H type、A type、K type、D type、T type				
Rotary angle	0~360°				
Weight	2.2kg				
Voltage-with standing value	500VAC/1min	1500VAC/1min			
Insulated resistance	100MΩ/300VDC	100MΩ/500VDC			
Protection class	IP-67				
Surrounding temperature	-25℃ ~ 60℃(The other temperature can be customized)				
Installation angle	Any angle				
Case material	Aluminium die-casting components				
Optional function	Overload protection function、heating and dehydrating device				

Standard	NO bracket

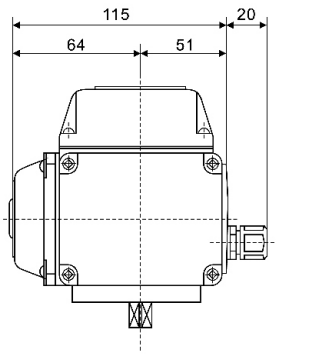

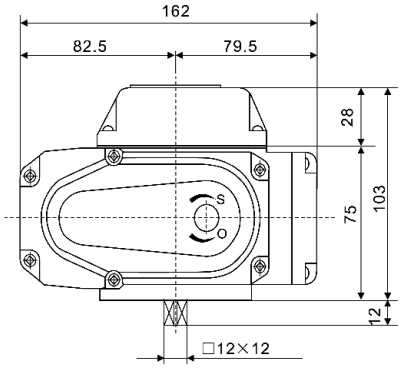

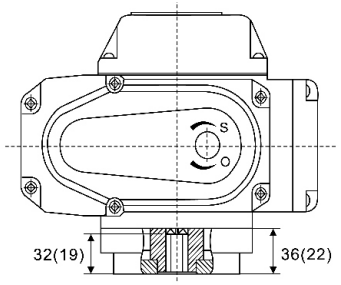

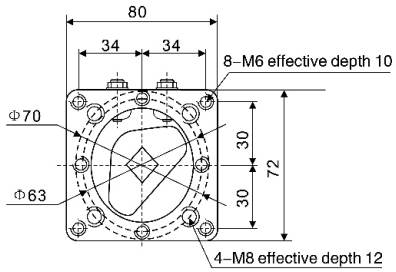

no-bracket type installation	
inner square	□9×9 □11×11 □14×14
flang	F03 F05 F07
stem	Height≤19mm(or≤32mm)

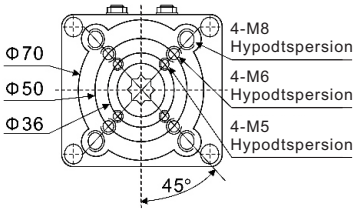

10 series appearance drawing and performance data

Performance \ Model / Power	10				
	DC24V	AC24V	AC110V	AC220V	AC380V
Motor power	23W				
Rated current	2.4A	3A	0.64A	0.32A	0.19A
Output torque	100Nm	50Nm/60Nm/100Nm			
Action time	10S	13S/15S/20S/30S			
Circuit control	B type、S type、R type、H type、A type、K type、D type、T type				
Rotary angle	0~90°				
Weight	4kg				
Voltage-with standing value	500VAC/1min	1500VAC/1min			
Insulated resistance	100MΩ/300VDC	100MΩ/500VDC			
Protection class	IP-67				
Surrounding temperature	-25℃ ~ 60℃(The other temperature can be customized)				
Installation angle	Any angle				
Case material	Aluminium die-casting components				
Optional function	Overload protection function、heating and dehydrating device				

Standard	NO bracket

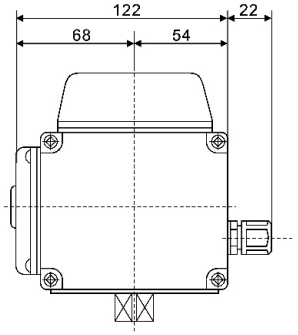

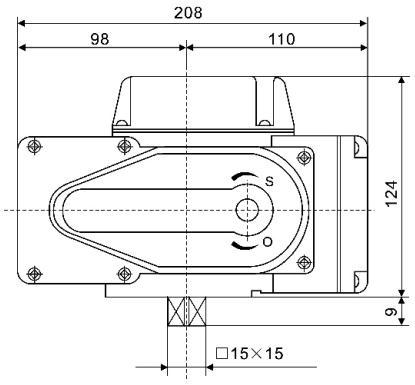

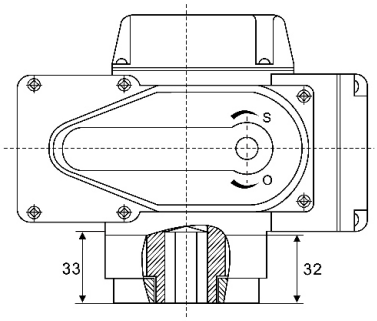

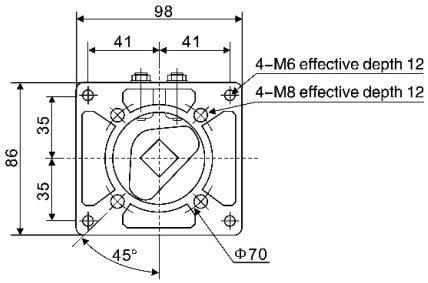

no-bracket type installation	
inner square	□9x9 □11x11 □14x14 □17x17
flang	F05 F07
stem	Height≤32mm

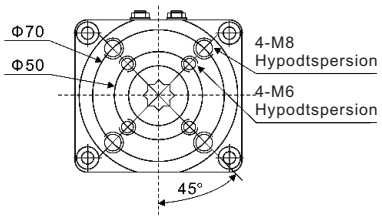

20/50 series appearance drawing and performance data

Model / Power / Performance	20					50			
	DC24V	AC24V	AC110V	AC220V	AC380V	AC24V	AC110V	AC220V	AC380V
Motor power	40W					90W			
Rated current	8.5A	5A	0.9A	0.48A	0.25A	8.5A	2A	0.92A	0.45A
Output torque	200Nm	80Nm/100Nm/150Nm/200Nm				150Nm/250Nm/300Nm/500Nm			
Action time	10S	9S/15S/20S/30S/60S				9S/15S/20S/30S/60S			
Circuit control	B type、S type、R type、H type、A type、K type、D type、T type								
Rotary angle	0~90°								
Weight	7kg					7.8kg			
Voltage-with standing value	500VAC/1min	1500VAC/1min							
Insulated resistance	100MΩ/300VDC	100MΩ/500VDC							
Protection class	IP-67								
Surrounding temperature	-25℃~60℃(The other temperature can be customized)								
Installation angle	Any angle								
Case material	Aluminium die-casting components								
Optional function	Overload protection function、heating and dehydrating device								

Standard	NO bracket

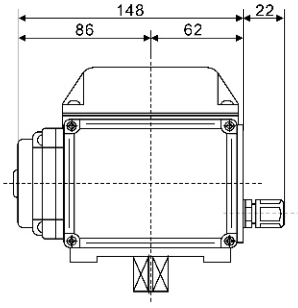

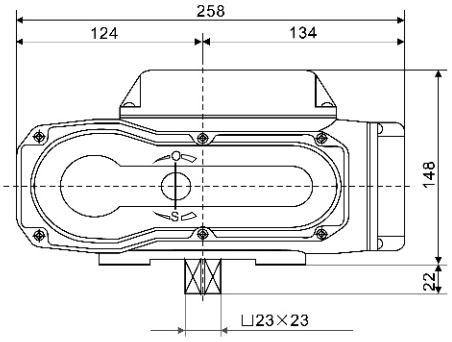

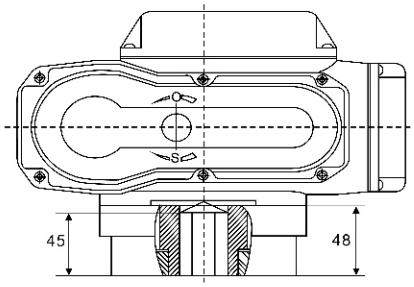

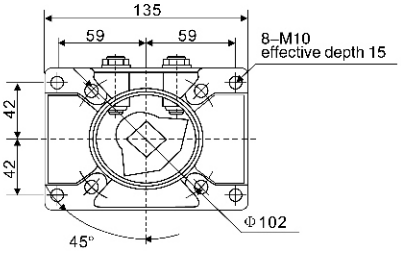

no-bracket type installation		
	20	50
inner square	□14×14 □17×17 □22×22 □27×27	
flang	F07 F10	
stem	Height≤44mm	

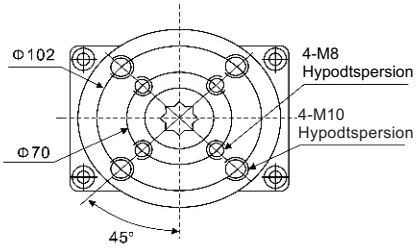

100/200 series appearance drawing and performance data

Performance \ Model / Power	100				200			
	AC24V	AC110V	AC220V	AC380V	AC24V	AC110V	AC220V	AC380V
Motor power	100W				100W			
Rated current	9A	2.2A	1.2A	0.48A	9A	2.2A	1.2A	0.48A
Output torque	800Nm/1000Nm				2000Nm			
Action time	30S/50S			30S	100S			50S
Circuit control	B type、S type、R type、H type、A type、K type、D type、T type							
Rotary angle	0~90°							
Weight	11.2kg				11.8kg			
Voltage-with standing value	1500VAC/1min							
Insulated resistance	100MΩ/500VDC							
Protection class	IP-67							
Surrounding temperature	-25℃ ~ 60℃(The other temperature can be customized)							
Installation angle	Any angle							
Case material	Aluminium die-casting components							
Optional function	Overload protection function、heating and dehydrating device							

Standard	NO bracket

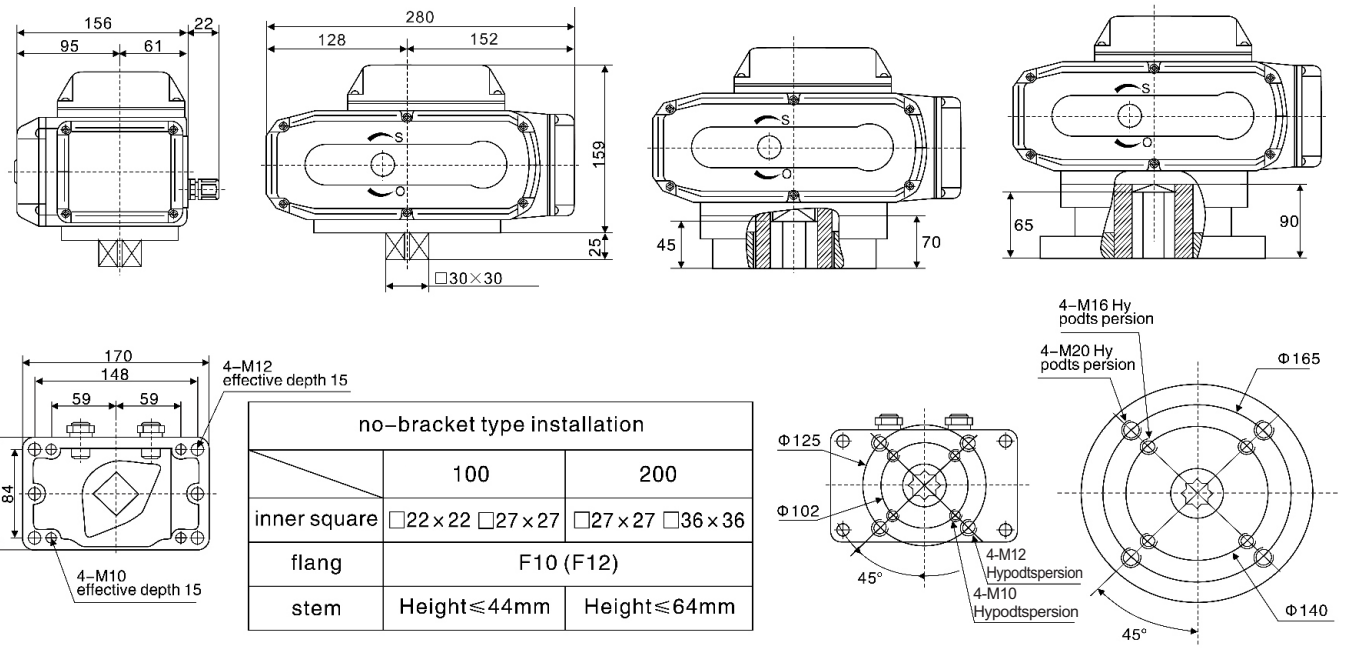

no-bracket type installation		
	100	200
inner square	□22×22 □27×27	□27×27 □36×36
flang	F10 (F12)	
stem	Height≤44mm	Height≤64mm

400/600 series appearance drawing and performance data

Performance \ Model / Power	400			600		
	AC110V	AC220V	AC380V	AC110V	AC220V	AC380V
Motor power	200W			200W		
Rated current	4.1A	2.1A	0.9A	4.1A	2.1A	0.9A
Output torque	4000Nm			6000Nm		
Action time	100S			150S		
Circuit control	B type、S type、R type、H type、A type、K type、D type、T type					
Rotary angle	0～90°					
Weight	31kg					
Voltage-with standing value	1500VAC/1min					
Insulated resistance	100MΩ/500VDC					
Protection class	IP-67					
Surrounding temperature	-25℃～60℃(The other temperature can be customized)					
Installation angle	Any angle					
Case material	Aluminium die-casting components					
Optional function	Overload protection function、heating and dehydrating device					

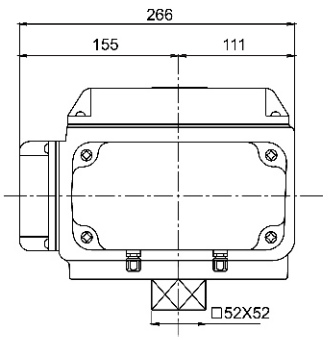

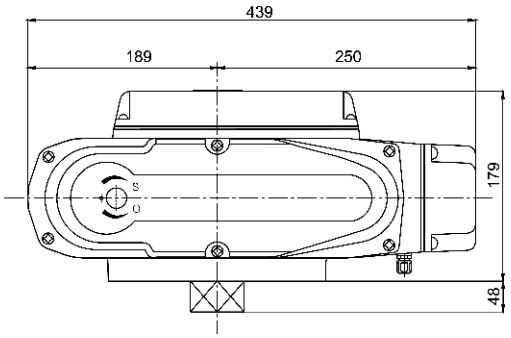

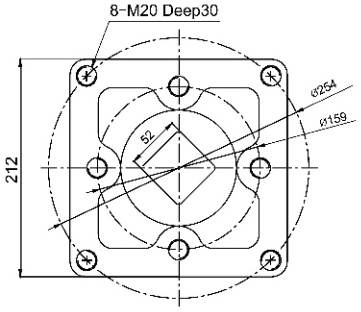

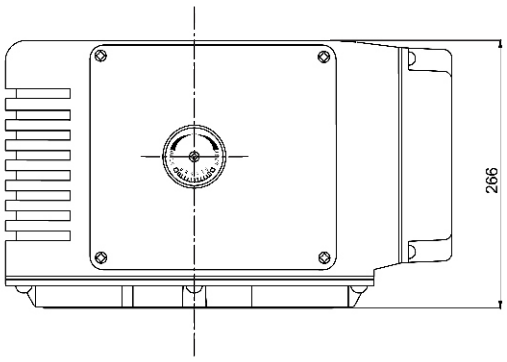

Modulating type series appearance drawing and performance data

Model / Power / Performance	05A	10A	20A	50A	100A	200A	400A	600A
	DC24V、AC24V、AC110V、AC220V、AC380V；50/60Hz							
Motor power	10W	23W	40W	90W	100W	100W	200W	200W
Rated current	0.24A (AC220V)	0.32A (AC220V)	0.48A (AC220V)	0.92A (AC220V)	1.2A (AC220V)	1.2A (AC220V)	2.1A (AC220V)	2.1A (AC220V)
Output torque	50Nm	100Nm	200Nm	500Nm	1000Nm	2000Nm	4000Nm	6000Nm
Action time	30S	30S	30S	30S	50S	100S	100S	150S
Rotary angle	0～360°	0～90°						
Input signal	4～20mA.DC、1～5V.DC、0～10V.DC(Others would be set before sale)							
Output signal	4～20mA.DC(Others would be set before sale)							
Precision grade	1%							
Weight	2.2kg	4.0kg	7.0kg	7.8kg	11.2kg	11.8kg	32kg	32.5kg
Voltage-with standing value	DC24V：500VAC/1min			1500VAC/1min				
Insulated resistance	DC24V：100MΩ/300VDC			100MΩ/500VDC				
Protection class	IP-67							
Surrounding temperature	-25℃～60℃(The other temperature can be customized)							
Installation angle	Any angle							
Case material	Aluminium die-casting components							
Optional function	Overload protection function, heating and dehydrating device							

Power and product wiring drawing

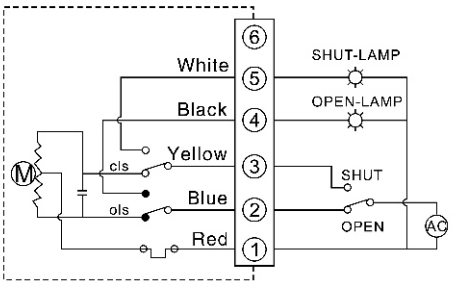

(B):Standard switch type

The opening or closing operation is realized by switching "open" or "close" the circuit, outputting a group of full open or close active signals.

Wiring Instruction:

1. Terminal 1 connect with null line.
2. "open" operation when terminal 2 contacted with phase line.
3. "close" operation when terminal 3 contacted with phase line.
4. open lamp in terminal 4 on when "open" operation.
5. shut lamp in terminal 5 on when "close" operation.

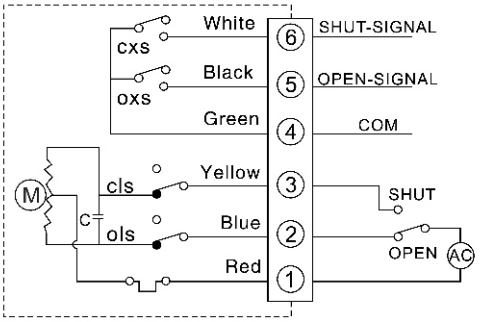

(S):Passive contact type

The opening or closing operation is realized by switching"open"or "close"the circuit, outputting a group of full open or close passive signals.

Wiring Instruction:

1. Terminal 1 connect with null line.
2."open"operation when terminal 2 contacted with phase line.
3."close"operation when terminal 3 contacted with phase line.
4. Terminal 4 is the passive contact common end.
5. open lamp in terminal 4 on when"open"operation.
6. Shut lamp in terminal 5 on when"close"operation.

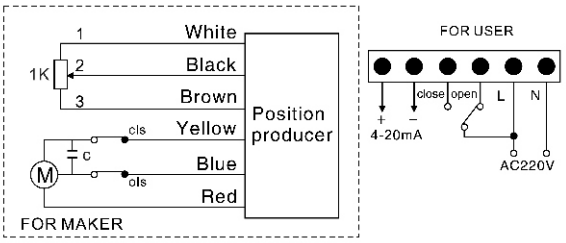

(K):Position signal type

The opening or closing operation is realized by switching " open" or " close" the circuit, outputting a relative group of open or close degree current signals.

Wiring Instruction:1. power input end "N" connect null line,

1. "L" connect phase line.
2. valve open when "L" connect with "open" .
3. valve close when "L" connect with "shut" .
4. "+" of input terminal connect with the positive pole of output signal , "−" connect with passive pole of output signal.

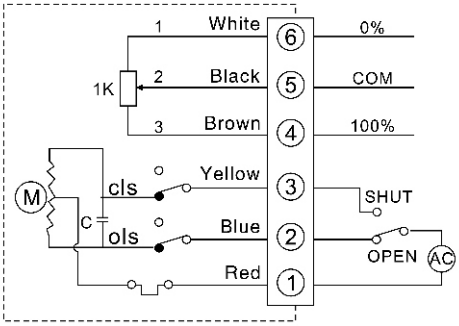

(R) :Opening degree signal type

The opening angle of valves is controlled byswitch circuit, with potentionmeter out putting resistance signal corresponding valves opening angle.

Wiring Instruction:

1. Terminal 1 connect with null line. Terminal 5 is the potentiometer woring arm.
2. "Open" operation when terminal 2 contacted with phase line. "Close" operation when terminal 3 contacted with phase line.
3. Terminal 4 is the potentiometer low terminal. When open operation, the resistance value between terminal 4 and 5 will increase with the opening degree.
4. Terminal 6 is the potentiometer high terminal. When clos operation, the resistance value between terminal 4 and 5 will increase with the closing degree.

Power and product wiring drawing

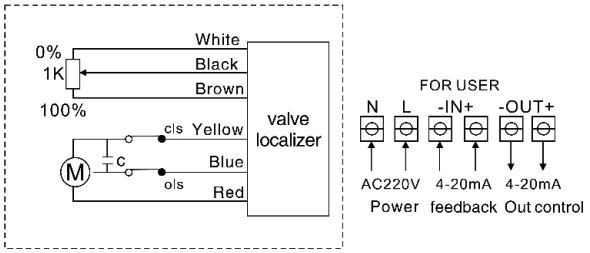

(A) : Modulating type

The opening or closing degree is realized by the standard signals through external computer or industry meter. mean while output the relative stardard signals.

Wiring Instrument:

1.Power input end "N" connect null line, "L" connect phase line.

2.the "+" of "IN" connect with the positive pole of input signal, "–" connect with negative pole of input signal.

3.The "+" of "OUT" connect with positive pole of output signal, "–" connect with negative pole of output signal.

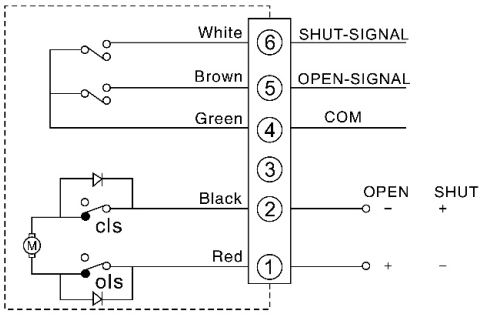

(D):DC switch type

According to the single conductivity of diode, the opening or closing operation can be realized bye means of the exchanging of the positive polarlty and the negative polarity and the negative polarity of DC power supply and output a group of full open or close passive signals.

Wiring Instrument:

1. "open" operate when terminal 1 connect with power positive pole, terminal 2 connect with negative pole.
2. "colse" operate when terminal 1 connect with power negative pole, terminal 2 connect with positive pole.
3. Terminal 4 is the passive contact common end.
4. open lamp in terminal 5 on when "open" operation.
5. Shut lamp in terminal 6 on when "close" operation.

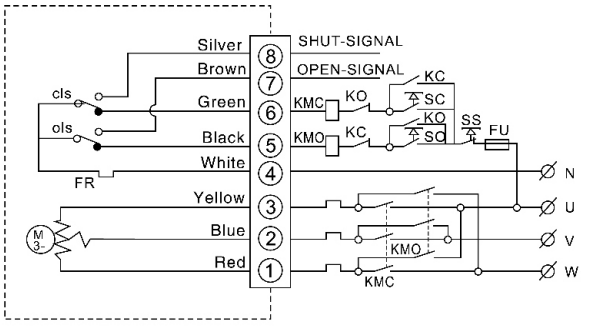

(H):3-phase Switch type

The opening or closing operation is realized by switching "open" or "close" the circuit,outputting a group of full open or close active signals.

Wiring Instruction:

1. Terminal 1,2, 3 connected with 3–phase power. By means of the extern alphase–reversing circuit,running normally or reversibly of motor.
2. Terminal 4 is the common point of external control circuit.
3. Terminal 5 is "open" operation control.
4. Terminal 6 is "close" operation control.
5. Terminal 7 is passive contact common point.
6. Termainl 8 be full open signal when "open" run position.
7. Termainl 9 be full close signal when "close" run position.

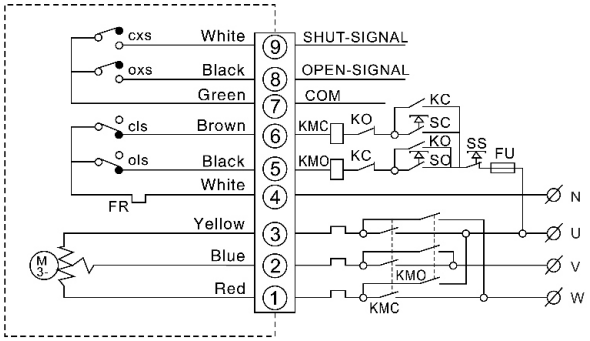

(T):3-phase Passive contact type

The opening orclosing operation is realized by switching "open" or "close" the circuit, outputting a group of full open or close passive signals.

Wiring Instruction:

1. Terminal 1, 2, 3 connected with 3–phase power. By means of the external phase reversing circuit,running normally or reversibly of motor.
2. Terminal 4 is the common point of external control circuit.
3. Terminal 5 is "open" operation control.
4. Terminal 6 is "close" operation control.
5. Terminal 7 is passive contact common point.
6. Termainl 8 be full open signal when "open" run position.
7. Termainl 9 be full close signal when "close" run position.

Power Voltage

Please choose power volt according to product' nameplate or wiring coil, the possible volt listed as followings:

Notes: when choosing AC380V, the power' wiring should take notice of sequence of phase line and ascertain that thestroke switch should correctly control on and off of valve, or else, the actuator would be damaged.

selection of fuse, breaking switch:

In order to protect the actuator and avoid short circuit, please ues fuse or breaking switch. The capacity of fuse and breaking switch refer to the following form.

voltage / Modef / Fuse	AC380V	AC220V	AC110V	AC24V	DC24V
05	2A	2A	3A	5A	5A
10	2A	3A	5A	7A	7A
20/50	3A/5A	5A/7A	7A/10A	10A/11A	15A
100/200	5A	7A	10A	20A	
400/600	7A	10A	15A		

Can't connect the power lines of two or several electronic devices in parallel;
Cant' control several electronic devices with the same joint, Other wise will cause out of control and over heatedly with the electrical machinery.

Installation

Noted items of indoor installion

1、The common product couldn't be installed in the room full of explosive air unless explosion–proof product;
2、If installed at certain place having water or splashed material, operator is supposed to install the protection cover additionally for covering complete–machine safely;
3、Operator should save necessary space need by manual wire–in operation in advance.

Noted items of outoor installation

Please installing protection cover above complete–machine additionally in order to avoid rain or sunshine;
Please save necessary space needed by manual wire–in operation in advance.

***Notes: The shining of sunshine outdoor would lead to high–temperature which accelerates ageing of components, even losing effectiveness; The rain would accelerate aging of rubber pad, moreover, the product will be damaged if failing in water proof conduction.**

Surrounding temperature、fluid temperature condition

1、Surrounding temperature should range from -25°C to 60°C.

***Note: when using Below 0°,or in the environment of biggest difference in temperature, operator should use certain heating–dehumidifier device with performance of anti–dewing.**

2、When the fluid' temperature is high, operator should use high–temperature type connection frame and connector to install driving appliance onto valve.

Wiring cable and wiring connection

1、Electric actuator series of products, Waterproof Connectors PG 13.5–in line lock, please use Φ8~ Φ12 cable wire.
2、Please use the suitable cable so as to guarantee the Protection levels of the electric actuators.
3、Passing cable through line–lock, and fasten thread–end onto terminal stand;
4、Tightening outer shell of wire–lock for fastening cable.

Wiring line–pipe

1、When using line–pipe, operator should adopt waterproof measure;
2、As drawing 1, operator should make sure that the electric appliance of this valve is higher than line pipe, in order to prevent water from inflowing electric appliance along line which leads to damage of machine.

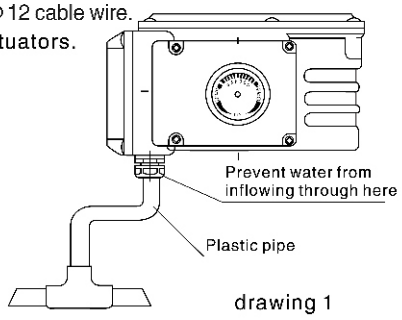

drawing 1

The connection drawing between electric execution structure and valve, outline dimension drawing of electric butterfly valve.

Connection with valve(drawing 2)

1、Manually rotate valve and ascertain that there is no abnormal phenomena,then rotate valve to wholly-closed position.
2、Lightly fasten the support onto valve with screw.
3、Slip the coupling over valve-bar of valve.
4、Rotate electric appliance to wholly-closed position.
5、Insert output axle of electric appliance into coupling.
6、Lightly fasten electric appliance onto support with screw.
7、Manually wholly stroke rotate electric appliance to guarantee non-eccentric、 no-blocked etc.
8、Tighten every screw on support.

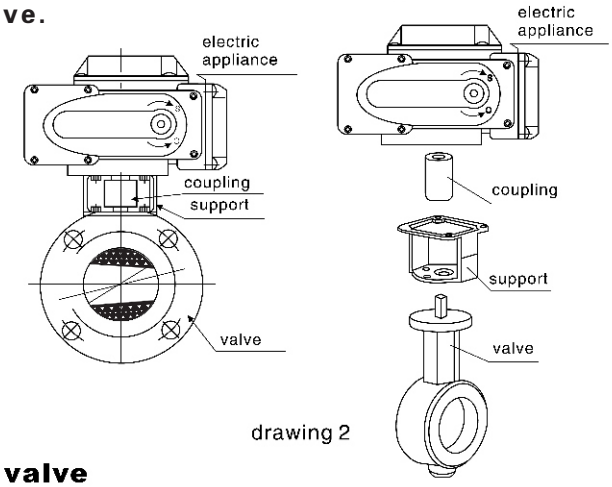

drawing 2

Outline dimension drawing of electric butterfly valve

Nominal dimension		Electric appliance mode	D1		D2			H1	Standard	No-bracket
Metric	British		1.0MPa	1.6MPa	A model	Lt mode 1.0MPa	Lt mode 1.6MPa		H2	H2
DN50	2"	05	125		94	157		66	282	256
DN65	2.5"	05	145		112	177		73	294	268
DN80	3"	05	160		121	192		91	307	729
DN100	4"	10	180		153	212		102	345	327
DN125	5"	10	210		182	242		117	364	346
DN150	6"	20	240		209	280		131	418	406
DN200	8"	20	295		262	335		164	448	436
DN250	10"	50	350	355	319	390	405	195	508	496
DN300	12"	100	400	410	373	445	458	236	577	549
DN350	14"	100	460	470	408	500	518	283	580	558
DN400	16"	200	515	525	488	565	580	320	659	649
DN450	18"	200	565	585	541	615	640	337	681	671
DN500	20"	200	620	620	589	668	710	377	739	709
DN600	24"	200	725	770	727	780	836	425	821	811

Outline dimension drawing of electric butterfly valve

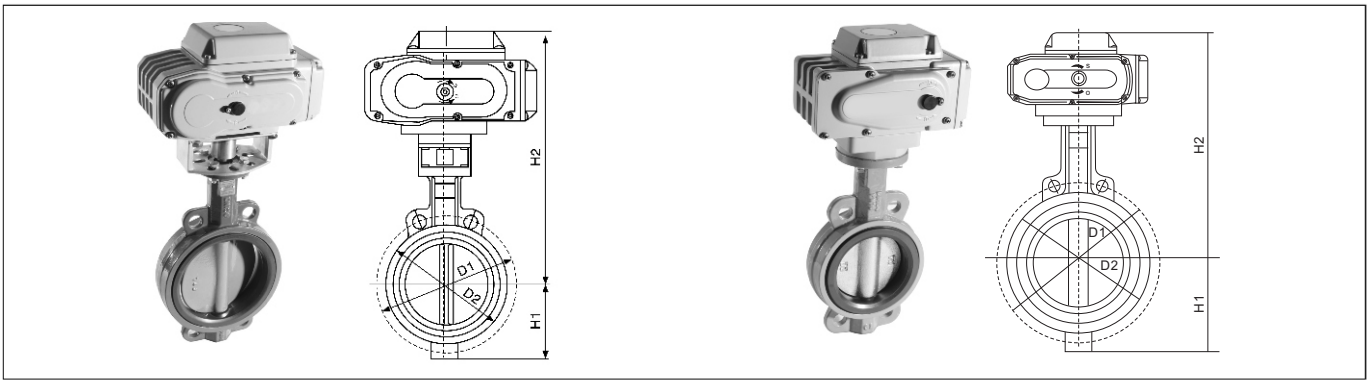

The reguation of switch type product

The regulation of electric position–limiting

⚠ The manual operation is for bidden while contacting

Means that the manual operation is forbidden in electric shock Before regulating electic Position–limiting, operator should loosenregulation screw limited mechanically firstly, operator can't re–fix mechanical position–limiting again until the electric limiting has been reguated in order to avoid mechanically–blocking.

Loosen screw of stroke stop, and use screw–driver to knock lightly stroke stop, which could regulate angle of stroke stop and change open–close angle of electric position–limiting, it would produce "crack" noise during operating of stroke switch. At last, tighten screw of stroke stop to greatest degree.

⚠ Regulating the Electric Valve Actuator which rotation angle from 0 ~ 90°, can not regulate and magnify the angle at random.

The layout drawing of 5/10 stroke stop and stroke switch(drawing 3)

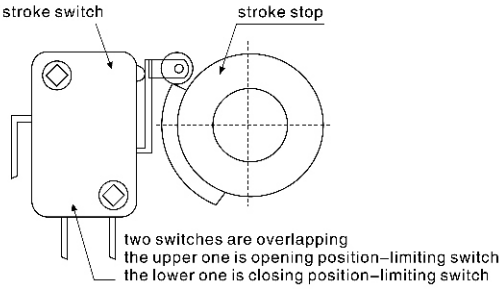

drawing 3

The layout drawing of 20/50/100/200 stroke stop and stroke switch(drawing 4)

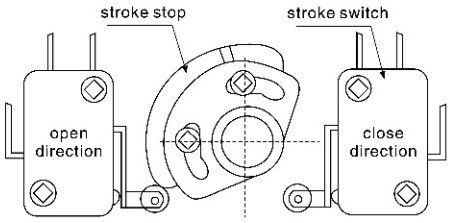

drawing 4

Regulation of mechanical position-limiting(drawing 5)

1、Rotate it to the wholly–open Position with handle.

2、Loosen tighten–nut and rotate regulation screw in order to touch the mechanical link–stopper, then, rotate screw or semi–circle in anticlockwise direction for tightening nut.

3、Using same method, operator could regulate mechanical link–stopper at wholly–closed position.

Notes: the mechanical position–limiting should lag behind the electric limiting, or else, it would lead to heating of electirc machine.

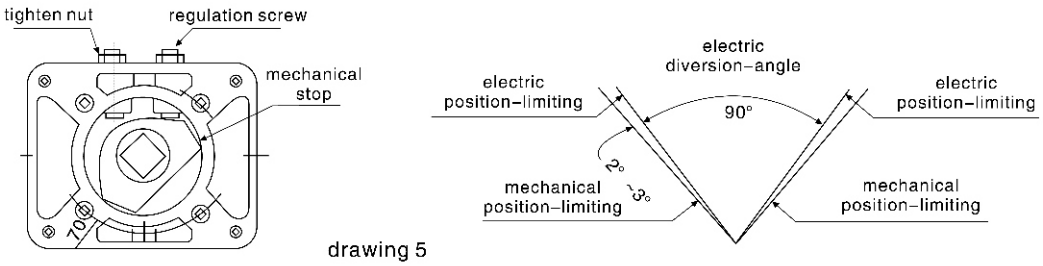

drawing 5

Potentiometer's regulation (opening type R、regulate type A)(drawing 6)

1、The resistance value of potentiometer is 1KΩ、5KΩ;

2、Using handle to rotate valve to wholly–closed position;

3、Loosen screw of opening–gear and rotate opening gear for regulating potentiometer. Using universal–meter to measure resistance value between 4 and 5 wiring terminals, and make the resistance valve achieve 10Ω tighten opening gear'fixing screw. (if the seven–line connector of regulate type are connected, please measure the resistance between RV and RS jacks).

* **Notes: operator also could loosen potentimeter for regulation, however, in case of being fixed, operator shoule take notice of the stitch closure between gears of potentiometer and opening, which can't be too large or small, or else, it would directly affect the complete set precision of execution device.**

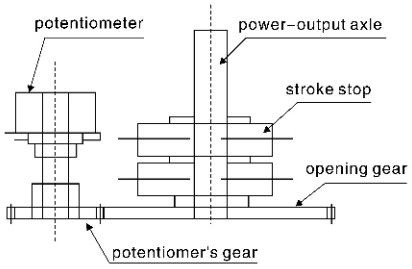

drawing 6

The regulation of adjusting type product

Regulation of execution machinery

Before regulating intelligent localizer, operator should understand the regulation method and regulate electric position-limiting、potentiometer and mechanical limiting of execution structure in the light of wholly-open、whollyclosed of valve.

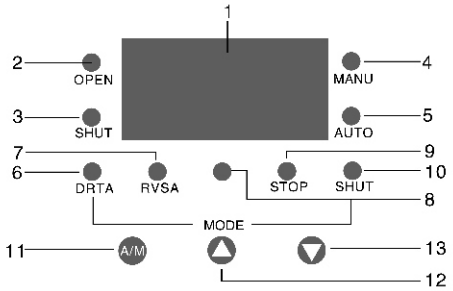

ZXQ2004

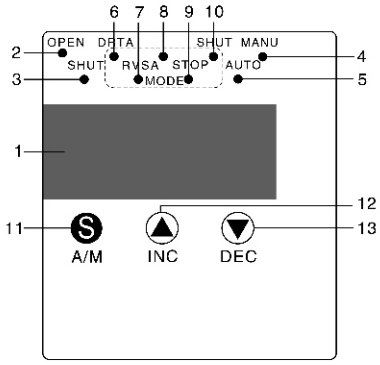

ZXQ2004c

Localizer panel

Date display	1	LED form	Show actual opening value、setting opening valve of valve、temperature inside localizer' cover and its setting data by means of pressing key for changing
State indication	2	OPEN	Output control "open" relay shutting
	3	SHUT	Output control "closed" relay shutting
	4	MANU	Manual state
	5	AUTO	Automation state
Mode indication	6	DRTA	Obverse-action mode, input signal' corresponding output stated as following: 4mA-full(wholly-opened normally); 20mA-zero(wholly-closed normally)
	7	RVSA	Reverse-action mode, input signal' corresponding output stated as following: 4mA-zero(wholly-closed normally); 20mA-Full(wholly-opened normally)
	8	OPEN	Input signal' suspending state being "open", operator open the execution device to the greatest opening' limit
	9	STOP	Input signal' suspending state being "shop", operator should stop execution device' operation under present state
	10	SHUT	Input signal' suspending state being "shut", operator should open execution device to the smallest opening limit
Key	11	A/M	Manual/auto switching key, input revisal and switching key for data
	12	▲	Numerical increaaing key. This key can be used for converted-showing valve's setting opening valve under auto state too,it is at "on" state under manual state
	13	▼	Numerical reducing key. This key can be used for converted-showing internal temperature of localizer under auto state too, it is at "off" state under manual state

Wiring introduction

ZXQ2004 intelligent localizer can be connected with electric executlon device through one seven-line connector：

There is one wiring row tightened by six-line flexible pressure on localizer (as drawlng 7), of whlch the N、L lines connected wlth mid-line and phase-line of 220VAC single-phase circuit, two 4~20mA (or 1~5V) IN termlnals connected wlth control current (voltage), two 4~20mA terminals outputting feedback current signal can be connected with ammeter so as to display actual valve's opening, while, it also can be not connected. The connection line could take Φ 1-2mm single core, many core or insulated line (shell insulation skin) as line core, operator is suggested to twisttightly and plate tin onto line core in case of using many-core lihe, which woud simplify connection. Duringwiring, operator could insert single core line or many-core line (afler tin plating) into hole, and supposed to continue to insert for 4~5mm fur ther after touchlng flexible resistance. Provided the line soft, operator can put the line into hole and use " - " shape screw driver to press the flexlble locking switch on corresponding hole after touching resistance, then inserting line inwards for 4~5mm and loosen flexible tighten switch. After the line is tightened, it is difficult to be drawn out under normal case. However, provided user wants to draw out line, he should press down flexible tighten switch on corresponding hole by " - " shape screw driver.

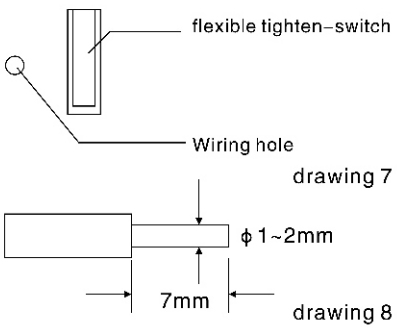

The setting operation method of intelligent localizer

Connecting the lines between given signal source、 output signal measure meter(no–connected is allowed) and powersupply ac cording to wiring drawing.

1、When electrifying, the actual opening value of valve would be displayed, and the localizer is at auto–test state at this time;

2、Pressing A/M key for converting to manual state, separately pressing▲and▼ keys is corresponding to manually "open" and "shut" operation of execution device.

3、Under auto state, pressing▲can look into valve's setting opening valve, and the varying trend and stability of input signal could be displayed at this time.

4、Under auto state, pressing▼can look into internal temperature of localizer's casing, the localizer would stop open–shut controi –ling to execution device if temperature exceeds 70;

5、Under auto state, pressing A/M key and lasting for 4S, it would enter the setting data of following form, the data valve could be revised by means of pressing ▲ and▼keys, the specific stating please refer to operation process drawing.

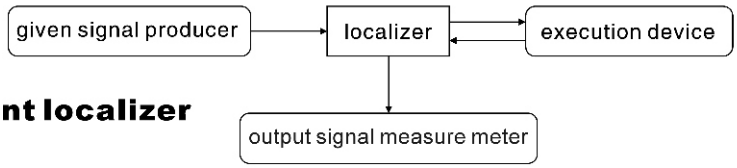

Setting operation method of intelligent localizer

Data form

Data	showed value	Meaning	ex–factory value
U0	00x.0	X=1 the electronic driving is allowed, X=0 the electronic driving is not allowed	1
	000.x	X=0 changing location precision is not allowed, while, changing readjusting time is allowed X=1, 2, 3 changing readjusting time is not allowed, and the location precision can be changed	0
U1	00x.0	Setting positive and negative action, X=0 is positive, X=1 is negative.	1
	000.x	Suspend–signal mode, X=0(neglection)X=1(open)X=2(stop)X=3(shut)	2
U2	xxx.x	The control output lower–limit limiting value is 0≤U2<100, during process of manual operation and calibratinq zero、full position, it is not limited by this data.	0.0
U3	xxx.x	The control output upper–limit limiting value is 0 < U2 < U3≤100, during process of manua operation and calibrating zero、full position, it is not limited by this data.	100.0
U4	00x.x	The precision is adjustable, equals X、X/100	0.4
U5	xxx.x	Operation cipher, (U5=003.1 is opening calibrating of entering execution device)	
U6	xxx.x	Execution device' zero confirmation, please pressing▲▼key, when touching given zero position,please press A/M key for zero–position confirmation, then enter U7.	
U7	xxx.x	Execution device's full–position confirmation, please pressing▲▼key, when touching given full –position, then pressing A/M key for full–position confirmation	
Notes: other data are reserved by manufacturer, if customers need, please refer to appendix.			

※ The execution device is calibrating before ex–factory, user just needs to connect power supply, signal powal and output signal measure meter (no–connection is allowed), then coule be put into work without re–calibrating again.

Calibrating zero –position and full–position of exicution device, this calibrating has no influence on inputting、outputting signal for localizer, after the execution device is readjusted again, operator must conduct calibrating for rotation angle of execution device, then the localizer can work normally. Calibrating has two methods as followings:

The Ist method (manually calibrating)(according to the operating process):

1、Enter into U5 and make U5 equal 003.1, then pressing A/M key again and enter into U6 data (calibrating zero–position), press▲ and▼key, correspondingly, the execution device will operate in "open" and "close" direction, and the actual opening value of valve displayed will increase and decrease in responses. When touch the expected zero–position (commonly at wholly closed position), please press down A/M key for zero–position confirmation and enter into U7 data.

2、Enter into U7 data (calibrating full position), like the operation above, pressing ▲and▼ key until expected full–positi on (commonly at wholly–open position),and press A/M key for full position confirmation, the actuator will return the site of 90% automatically,then return to U5.

3、Revising U5 to be 000.5, return to test state.

The 2nd method (auto calibrating):

1、Enter into U5 and revise U5 to be003.1, the pressing▼ket at the same time of pressing A/M key, that is start auto calibrating, tjis time localizer woukd calibrate zero–prosition secondly, the localizer would be at manual state after being calibrated. ★ Enter to data U5 again and revise U5 to be 000.5(defaulting), then press A/Mkey and the ca–librating result would be stored.

Euring test process of localizer, the execution device would oscillate and produce heat because of input–signal' quality or external electromagnetic interruption etc, for preventing execution device from oscillating continuously, operator could shange U0 (000.X);

1、Setting X=0, the location precision would retain setting precision during oscillating process of execution device, however, in terrupting work of execution device etc;

2、X=1,2,3 the readjusting time would keep invariant (about 2 seconds) during oscillating process of execution device, but the precision of execution device would decrease, thus achieve the work demand under the most proper precision.

Notes:if there is 10S leisure in process of revising data, it would return to test state automatically.

Operation process

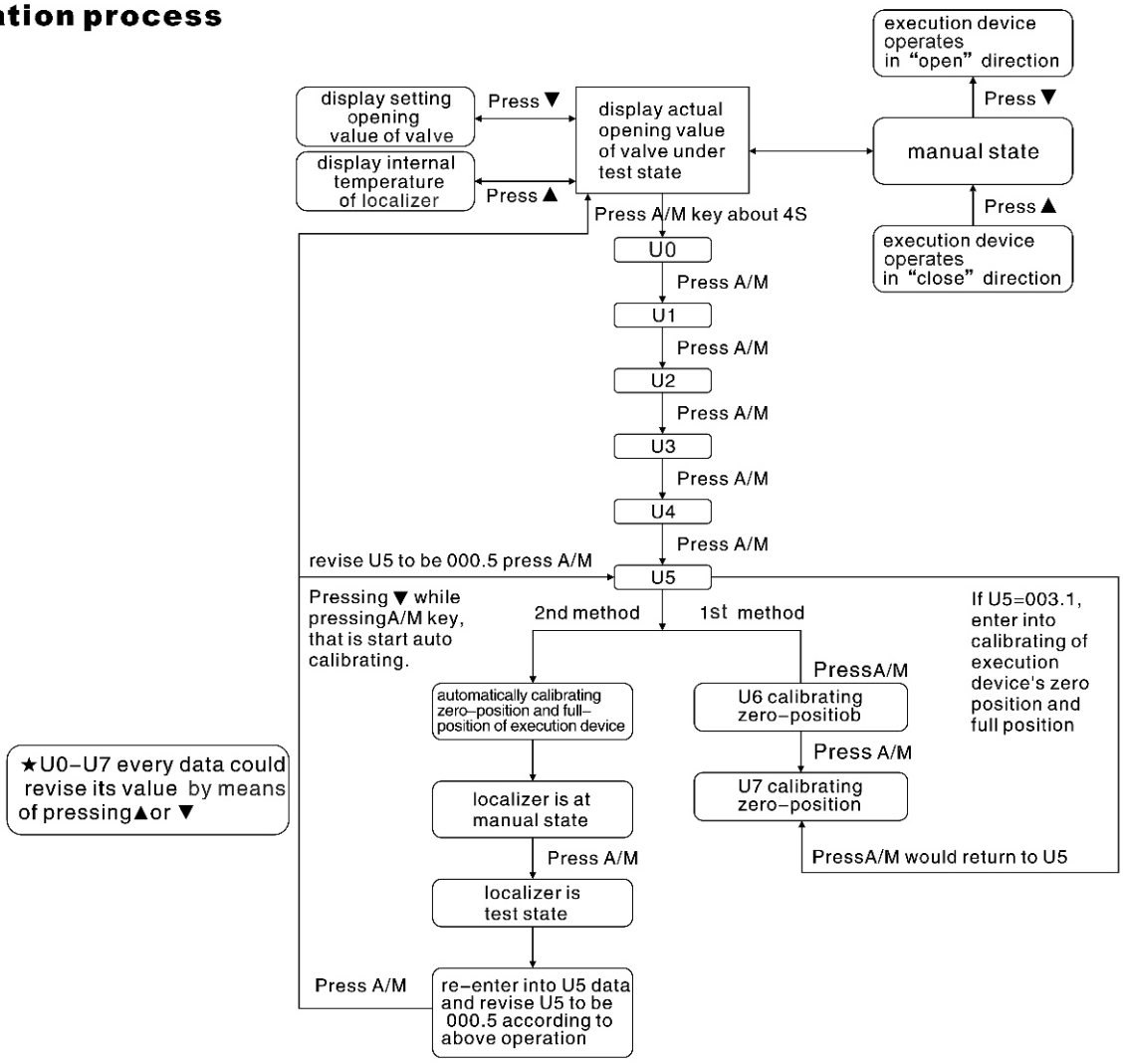

Setting operation method of intelligent localizer

Wrong code list

Wrong code	Meanings
E-01	The controlling signal disrupt or below 0.3mA
E-03	The signal feedback line or open-close line between localizer and execution device are connected contrarily
E-05	Execution device produces obvious oscillation, maybe because the input signal or feedback signal are unstable, precision being too high etc
E-06	Blocking phenomenon occurred during execution device' operation in "close" direction
E-07	Blocking phenomenon occurred during execution device' operation in "open" direction
E-08	The temperature inside localizer's casing exceeds 70℃

Appendix: other calibrating operation–calibrating method of inputting signal、outputting signal etc refer to following drawing 9.

⚠ (This operation is not required after ex–factory generally, if required, please use it under engineer's instruction)

input signal calibration

1、Under normal test state of localizer, pressing A/M key for 4S would enter into setting data state; the "U0" data value will be displayed, operator also could select "U5" data by A/M key. Pressing ▲ ,▼key could change numerical value of "U5" to be 011.1. (Numerical meaning refers to following form)

2、Entering into "U8" data for calibrating zero position of inputting current; when calibrating, the signal of inputting zeroposition(is 4mA commonly), then presing A/M key for confirmation, and enter into "U9" data.

3、 "U9" data is calibrating input–current full measuring range; when calibrating, please input full measuring range signal (is 20mA generally) and press A/M key for confirmation, then enter into "U5" data;

output signal calibration

1、into U5 to be 001.1, then press A/M key for entering into U6 data; Skip data U5, U6, U7, U8 for entering into Ua;

2、 "Ua" is calibrating output–current zero position: when calibrating, pressing ▲,▼key so as to set the calibrated output to be 4mA or other numerical value, which is corresponding to the zero–position outputting signal value of execution device, then pressing A/M key for confirming and enter into "Ub" data;

3、 "Ub" is calibrating output–current full measure range: pressing▲,▼key so as to set calibrated output to be 20mA or othernumerical value, which is corresponding to the full position outputting signal value of execution device, then press A/M key for confirmation and enter into "Uc" data;

4、 "Uc" data is calibrating temperature inside casing, pressing▲,▼key for regulation;

Pressing A/M key for confirmation, then return to "U5" data and revise "U5" numerical value to set U5 to be 000.5. then pressing A/M key for confirmation and return to test state.

Data	Display	Meanings
U5	0xx.x	Enter into cipher calibrating. U5=011.1, enter into input–current calibrating; U5=001.1, enter into output–current calibrating; U5=003.1, enter into zero、full position calibrating of execution device
U6	xxx.x	Execution device' zero–position confirmation data
U7	xxx.x	Execution device' full–position confirmation data
U8	xxx.x	Input–current zero–position confirmation data
U9	xxx.x	Input–currentfull–position confirmation data
Ua	xxx.x	Calibrating output–current zero–position data
Ub	xxx.x	Calibrating output–currentfull–position data
Uc	xxx.x	Revise temperature inside casing

Use and maintenance

⚠ The manual operation is banned during electrification

Notes: This product has pass completely–test and checkout conducted by quality–test workers before ex–factory

In the process of installation、connection between product and valve, the valve maybe can't be wholly opened and closed because of valve's coupling problem etc, in this case, the readjusting is required, its process stated specifically as followings:

1、Firstly, installing and connecting correctly the execution device and valve;

2、Manually test–run

Unload electric cover and handle–axle rubber stopper, then inserting enclosed hexagonal handle into hexagonal hole and rotating it in clockwise direction, the valve's opening valve would be reduced;

When valve at wholly–closed position, please observe whether the limit stroke switch in "close" direction works or not (it will produce crack sound when working), then rotate handle for semi–circle so as to check whether the mechanical stop touches regulation screw or not;

Rotating handle in anticlodkwise direction and the valve's opening value would increase, then like the operation above stated, operator should check the limit stroke switch and mechanical stop. After manually test run, operator should install the electric cover and rubber stopper;

3、 Electric test–run

Unload wiring cover and doing wiring correctly according to circuit drawing on cover;

Electrifying for test–run, operator should take notice of working circumstance of execution device and valve.

4、Maintenance

on account of the compacted structure character , we have used the the molybdenum lubricating grease with long operating life & good pressure resistance . There is no need to lubricate . Please check if there is something wrong when the valve seldom work or no work .

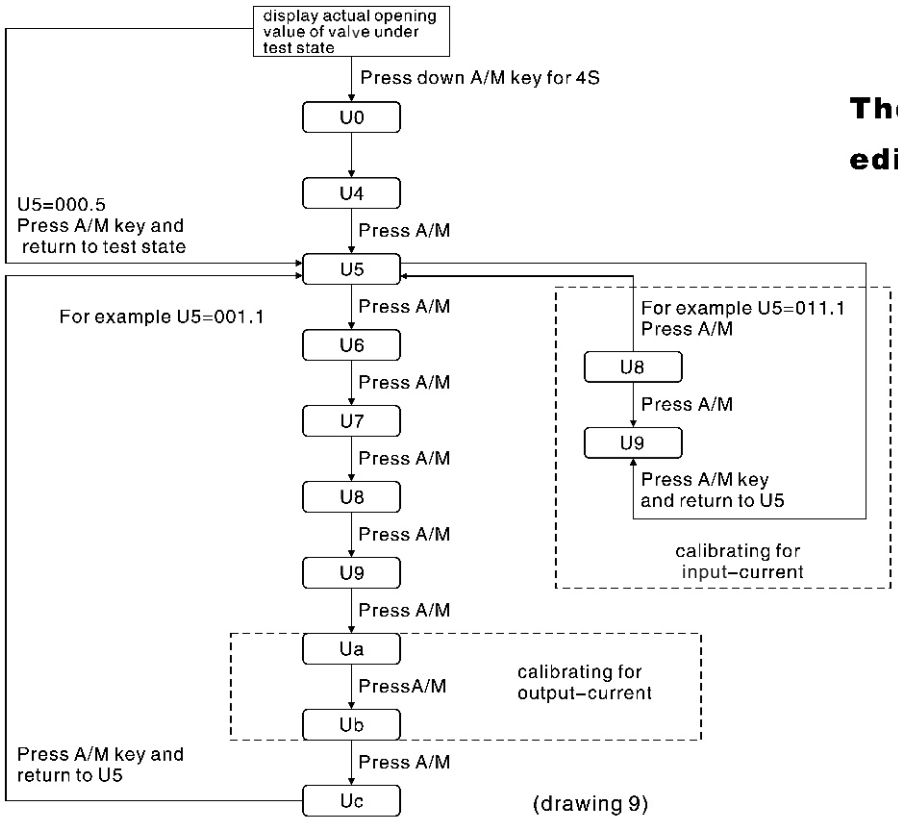

(drawing 9)

The introduction of upgrading edition for ZXQ2004 model

1、Adding to simple automatically calib–rating method. Under automatic state, pressing A/M key and▼key, then dis–entangling them at the same time, starting the automatic calibrating.

2、According to the calibrating method from the introduction book, after calib–rating the full position(U7), pressing confirm key(A/M), it will not return U5 immediately, however, the electric valve will go to 10% position of calib–rating measurement, then return U5.

3、The model adds to the function which can make the valve work all the time. When the electric valve does not work (in 10% of the measurement), the model will stop controlling output, then it will check the valve again in one minute. If the malfunction does not eliminate, it will check the valve again, three times in total. If the malfunction does not eliminate again, the model will stop checking, indicate the malfunction code, as far as the malfunction is eliminated.

You can make the model get right by pressing panel key or electrifying again.

Failure and countermeasure

Failure state	Cause	Countermeasure
Electric-machine doesn't rotate	The power-supply's voltage is low or no power-supply	Checking of power-supply volt
	Input signal is broken or the value is not enough	Checking of input signal
	Line-breakage or departing from terminal-stand	Connecting wirewell, change terminal stand for new one
	Temperature protector works	Reduce surrounding temperature
		Reduce usefrequency
		Load is too heavy
	The travel switch has worked.	Regulating stroke stop
	The electric capacity used for electric machine's enter phase is damaged	Change electri-capacity
	Electric-machine'line-breakage	Change motor
	Control box damaged	Change control box
The opening is changed without stop	There is interruption signal in signal source	Check input signal
	The interruption is produced from divisor	Change potentiometer
	The gear of divisor or opening are loosened	Check screw of tightening gear
The input signal doesn't conform with opening	Input signal is wrong	Check input signal
	The regulation of zeroing, multipying-power has problem	Readjust multiplying-power zero position
	Position-changing of potentiometer's gear	Readjusting of potentiometer's gear
No opening signal	Opening signal line is broken or connection has problem	Check wiring

Science and techology, promote the future